Xerox 700 Digital Color Press
Version 1.0 System Software

Customer Expectations Document Launch Version 1.2

Document Version issued June 24, 2008

Includes:

- *Optional Oversized High Capacity Feeder (OHCF)*
- *Optional High Capacity Feeder (HCF)*
- *Optional Interface Module (IFM)*
- *Optional High Capacity Stacker (HCS)*
- *Optional Light Production C Finisher (LPC Finisher)*
- *Optional CZ Folder (CZ Folder)*
- *Optional Advanced Finisher*
- *Optional Professional Finisher*

Copyright 2008 Xerox Corporation
Copyright protection claimed includes all forms and matters of copyrighted material and information now allowed by statutory or judicial law or hereinafter granted, including without limitation, material generated from the software programs that are displayed on the screen such as styles, templates, icons, screen displays, looks, etc.
XEROX®, and all Xerox product names and product numbers mentioned in this publication are trademarks of XEROX CORPORATION. All non-Xerox brands and product names may be trademarks or registered trademarks of the respective companies, and are hereby acknowledged.
Product appearance, build status and/or specifications are subject to change without notice

Revision History

Date	Author	Ver	Description
May 7, 2008	Amy Taylor	1.0	o Incorporated launch info, removed ECAT designation
May 14, 2008	Amy Taylor	1.1	o Incorporated Marketing, Spares, OpCo feedback o Optimum Product Performance table: o Updated monthly print volume range to 20,000-75,000 per Mike Madura o Updated service call rate per Sami Hanna o Verified IPM table with Mike Kelly o Recommended Supplies table: o Removed 220V-MN o Replaced BW and FC with words o Added note that 2 black cartridges are used in tandem o Environmental and Electrical Requirements for optional accessories verified with Rod Proulx o Dimensions for Common Configurations updated per Deb Van Loan's IPG draft 2 o Optional Accessories table : o Added Light Production C Finisher with Booklet Maker o Specified that CZ folder is available with Light Production C Finisher or Light Production C Finisher with Booklet maker o Advanced/Professional Finishers: o Added scuffing caveat per Rod Proulx o Added punch information o Added booklet info to Professional Finisher o Added power requirements to IFM and OHCF o Spelled out High Capacity Stacker in IFM description. o Added punch information and waste punch caveat to Light Production C Finisher o Modified layout for readability o Changed server names per Mike Madura o Added warm-up time per Anna Askels' request
June 24, 2008	Amy Taylor	1.2	o Changed version number and date o Changed Light Production C Finisher booklet table to reflect 60 gsm - 80 gsm capability of 25 sheets o Noted that Bi-Fold and Booklets are unavailable in Copy Mode

			o Specified that sizes larger than 11 x 17" can not be offset on Light Production C Finisher stack tray
			o Limitations/ Caveats table:
			  o Added paper change/Sleep Mode note
			  o Added Supplies/Faults notes
			  o Added Tray 5 note
			  o Added Punch Waste note
			o Productivity Speeds table :
			  o Specified that all internal trays are 64-220 gsm only
			o Light Production C Finisher Caveats:
			  o Added note to empty Purge tray after cancelling booklet job
			o Added Fold accuracy information

Table of Contents

Customer Expectations Document Launch Version 1.2 **1**
Revision History 2
Xerox 700 Digital Color Press 5
  Centerline Paper 5
Optimum Product Performance 5
  Print Volume Range 5
Product Specifications 6
Product Caveats/Limitations 8
Media Selection Guidelines 9
Media Support Documentation 9
Productivity Speeds- IPM (Impressions per Minute) 10
Image Quality 12
Non-Standard paper sizes 12
Duplex Prints 12
Paper/Throughput 13
Transparencies 14
Recommended Supplies 15
Initial Supplies 16
Environmental and Electrical Requirements 16
  Electrical Requirements 16
  Installation Considerations 16
Space Requirements 17
  Calculating Space Required for Xerox 700 Digital Color Press 18
  Mobility Plate 18
Physical Dimensions 19
  Dimensions for Common Configurations of the Xerox 700 Digital Color Press: 19
Standard Configuration Features 20
Optional Accessories 20
Combination of Output Functions and Destinations 21
Optional High Capacity Feeder (HCF) 22
Optional Oversized High Capacity Feeder (OHCF) 22
Product Specifications (OHCF) 22
Advanced Finisher 23
Professional Finisher 23
Optional High Capacity Stacker (HCS) 24
Optional Interface Module (IFM) 24
Optional Light Production C Finisher (shown with Optional Booklet Maker) 25
Environmental and Electrical Requirements (Light Production C Finisher) 25
Light Production C Finisher Product Specifications 25
  Light Production C Finisher Top Tray Capacity 25
  Light Production C Finisher Stack Tray Capacity 26
  Light Production C Finisher Bi-Fold Capability (available on Optional Booklet Maker)* 26
  Optional C/Z Folder for the Light Production C Finisher 27
  Interposer for the Light Production C Finisher 27
  Hole Punching Capability for the Light Production C Finisher 28
  Staple Capabilities by weight and paper finish for the Light Production C Finisher 28
  Optional Booklet Maker for the Light Production C Finisher* 29
Light Production C Finisher Product Caveats/Limitations 29
Customer Agreement 30
  Reference Material 30
  Customer Support 30
  Customer Training 30
  Responsibility Matrix: 30
Customer Expectations Agreement 31

Xerox 700 Digital Color Press

This section will help you understand the performance and capabilities of the Xerox 700 Digital Color Press. Information on accessories will be reviewed later in this document.

All references to media capacity in this document are based on the Xerox Color Xpressions Plus (90 g/m^2/24 lbs) centerline paper. You will see the term "Centerline paper" several times in this document. "Centerline paper" identifies the stock at the middle of the range of stocks that will deliver optimum performance for a given characteristic, in this case machine stock capacity. Other paper weights and brands may alter capacity capabilities.

Centerline Paper

Media Type	Xerox Equivalent	
Uncoated paper	**North America** - Xerox Color Xpressions Plus (90 g/m^2/24 lbs) **Europe** – Colotech Plus (90 g/m2)	Xerox Color Xpressions Plus centerline paper
Coated paper	**North America** – Xerox Digital Color Elite Gloss 80# Text (120 g/m^2) **Europe** – Xerox Digital Color Elite Gloss 80# Text (120 g/m^2)	Xerox Color Xpressions Plus centerline paper

Customers may obtain a copy of the Xerox Recommended Materials List for the Xerox 700 Digital Color Press by going to Xerox.com and perform a search on the letters "RML".

Optimum Product Performance

Print Volume Range

The Xerox 700 Digital Color Press is designed for an average monthly print volume (AMPV):

Press	AMPV	Conditions
Xerox 700 Digital Color Press	35,000	8.5 in x 11 in/A4

The Xerox 700 Digital Color Press is designed to produce a consistent uniform-looking color image. The Xerox 700 Digital Color Press is designed to operate in the range of 20,000 – 75,000 copies or prints per month. The number of copies or prints between service calls on a digital color copier / printer is highly dependent on customer expectations of quality and the use of applications and throughput materials. At an average usage of 35,000 copies or prints per month using centerline paper, it is expected that service will be required about once every 5 weeks.

Product Specifications

The following table contains the specifications for the performance of the Xerox 700 Digital Color Press.

Item	Xerox 700 Digital Color Press	Comments
• **Internal tray capacity**	• 3 trays; 550 sheet capacity each	• Represents capacity using Xerox Color Xpressions Plus or Xerox Colotech+ centerline paper.
• **Paper Speeds of Media Weight for each paper weight setting (8.5 in x 11 in /A4 LEF ppm)**	• Productivity Mode Settings	• Refer to chart on page 10
• **Transparency feeding**	• 40 ppm b/w, 23 for color	• 3R5765 for USA and Canada; Xerox Europe: 3R93179. These premium transparencies are specifically designed to provide optimum copy quality. • Use of other transparencies may cause machine damage and result in excessive service calls.
• **Paper weight range**	• 64-300 g/m^2	• Papers that are 80 g/m^2 or lighter and less than 210mm (8.3 in) may have increased jam rates.
• **Paper Size**	• Min: 5.5" x 7.2" (140mm x 182mm) • Max: 13" x 19.2" (330mm x 488mm)	
• **Imageable Area**		• Copy: Guaranteed Image Quality area is 297 mm x 432 mm (11.69 in x 17.00 in). • Print: Guaranteed Image Quality area 317 mm x 480 mm (12.48 in x 18.90 in) • The Xerox 700 Digital Color Press will reproduce 11"x17" full bleed when printing on 12x18" or 13"x19" paper and A3 full bleed when printing on SRA3 paper. The maximum length images (480 mm) are only produced on media 19" long. On all media there is a Lead Edge deletion of 4mm and a Trail Edge deletion of 4mm. Side edge deletion is 3mm except for 13x19" media. On 13x19" media the side deletion is 3.5mm.
• **Warm-up Time***	• 150 sec or less • 30 sec or less	After PowerOn or after SleepMode exit After LowPower mode exit**

• **Resolution**	• 2400 x 2400 x 1 dpi • 600 x 600 x 1 dpi • 600 x 600 x 1 dpi	Print Engine Copy Print (Gray Font only)
• **Scanning Resolution**	• 600 x 600 or less	• Several scan resolution settings are selectable via Xerox 700 Digital Color Press User Interface touch panel. Lower resolutions will result in files that are smaller in size and thereby reducing the customer's network traffic.
• **Color Consistency**	• DeltaE = 7	• Within a page
• **Service Call Rate**	• At an average usage of 35,000 copies or prints per month on centerline paper, it is expected that service will be required about once every 5 weeks.	• Actual service call rate is influenced by total print volume, environmental conditions, area coverage, and media characteristics.
• **Shutdown Rate** • **(power-off power-on)**	• On average, less than 1 fault per day requiring a power-recycle to recover.	• Based on 35,000 AMPV, one 8-hour shift per day, using centerline papers.
• **Offsetting Catch Tray (Standard Output Device)**	• 500 sheets	• Represents capacity using Xerox Color Xpressions Plus or Xerox Colotech+ centerline paper.
• **Registration**	• Printing registration specifications are ±1.0 mm for front to back registration (all paper trays except MSI). • Printing registration specifications are ±3.0 mm for front to back registration for MSI. • Skew registration is ±1.0 mm along 200mm of the side edge in all trays for an 8.5 x 11”/A4 LEF sheet of 24 lb.(90 g/m2)	• Depending on paper stock, machine setup, and other factors.
• **Meters**	• Color Impressions • Black Impressions • Color Large Impressions • Total Impressions	• The Digital Copier enables accurate billing of black and white and color copied pages.

* Status where paper feed can be started immediately when Start button is pressed.
** When M/C exits from Low Power mode after 1 hour from change to Low Power Mode.

Product Caveats/Limitations

- The maximum print/copy speed for the system is determined by the process speed of the Xerox 700 Digital Color Press engine; image quality adjustments are done frequently to maintain consistent IQ.
- As a printer / copier, the Xerox 700 Digital Color Press is a document printer; therefore, in reverse order (face-up) printing the print engine will not cycle up until the entire job is ready. This will impact First Copy Out Time (FCOT). The printer may cycle down between each job depending on job complexity.
- When printing, overall system performance ('Click to Clunk' time) is primarily dependent upon the software applications and network environment being used. Rasterizing (RIP-ing) is only a small fraction of Click to Clunk time.
- Attempts to feed heavier than recommended paper stocks, and/or misuse of the media settings, may cause machine damage or poor image quality. Using media at run modes other than that recommended for the grade may cause poor image quality and serious machine damage.
- If the requested staple setting is outside machine capabilities, the copy job will not be stapled; print jobs will be held at the DFE.
- 45-36x faults may occur intermittently. The expected frequency is approximately once every 20,000 prints or once a week, depending on print volume. To recover, power off and power on the printer.
- 127-211 / 311 faults may occur after jam clearance. To recover, Power Off/ Power On the printer.
- System requirements messages (e.g., "Order Waste Toner Container", "Hole Punch Waste Container Full") may occasionally be blocked by the current UI screen. Close the Job Status screen and open the Machine Status/Supplies screen to check consumable status.
- If the machine stops running mid-job, or does not begin printing after a job is submitted, check the Machine Status/Supplies screen to determine if supplies need to be replaced. The system will stop if sufficient supplies are not available for a submitted job. If the problem persists, check the Machine Status/Fault screen, select the fault, and click on the Instructions button.
- The system incorrectly directs the customer to call for service when the Hole Punch Waste Container or Staple Waste Container is full. These containers are meant to be emptied by the customer.
- The Supplies screen incorrectly directs the customer to call for service when staples need replacing or when the waste toner container needs to be replaced. Disregard the message, as these are customer-replaceable items.
- The system does not prohibit duplexing coated substrates from the internal trays (Trays 1-3); however, there can be a significant increase in jams or multifeeds. If large quantities of coated paper are to be run, the OHCF is recommended for paper feeding.
- When using heavy coated 11'" x 17" stock, closing Trays 1-3 with too much force will result in a paper size misread. Open and close the tray gently to allow the paper sensors to correctly identify paper size.
- If the adjustment arms are disturbed while re-loading paper in Tray 5, the paper size setting will return to default and cause job to stop until the paper size setting is corrected by the user.
- If the paper is changed while the machine is in Sleep Mode, the machine may not register the change in paper size. If this occurs, first open the side paper guide to the largest size, close and re-open the tray, then adjust the side paper guide to the correct size.

Media Selection Guidelines

The following paper types are recommended to ensure you receive the best image quality from your Xerox 700 Digital Color Press:

Media Type	Xerox Equivalent	
• **Uncoated paper**	• North America - Xerox Color Xpressions Plus (90 g/m^2/24 lbs) • Europe – Xerox Color Xpressions Plus (90 g/m^2)	• Xerox Color Xpressions Plus centerline paper
• **Coated paper**	• North America - Xerox Digital Color Gloss Coated Text (120 g/m^2/80 lbs) • Europe - Xerox Digital Color Colotech Gloss Coated (120 g/m^2)	• Xerox Color Xpressions Plus centerline paper

- Every effort has been made to ensure that the Xerox 700 Digital Color Press supports a broad range of media. Keep in mind, however, that using only Xerox-recommended media maximizes reliability and paper-handling performance.
- For further information and recommendations regarding media selection and handling, refer to the Material Usage Guide provided with your system and the Recommended Materials List (RML) available from your Xerox representative or on www.xerox.com.
- Typically, heavy weight papers exhibit increased variability of formation and surface smoothness, which may result in degraded image quality.

Media Support Documentation

Media support documentation includes:

- Xerox 700 Digital Color Press Specialty Media Guide- Hints and Tips
- Recommended Materials Lists
- NA (North American) Customer Support / Escalation Process for media issues
- Materials Usage Guide
- The Paper Advantage Guide
- DMO (Developing Marketing Organization) Media testing support
- XE (Xerox Europe) Media testing support

These documents are available at http://www.xerox.com.

Productivity Speeds- IPM (Impressions per Minute)

Internal Paper Trays and HCFs		Paper Size					
		A4 LEF, B5 LEF	8.5" x 11" LEF	A4 SEF, 8.5" x 11" SEF	B4 SEF, 8.5" x 14" SEF	A3 SEF 11" x 17" SEF	13" x 19.2"
		<=210 mm	<=216 mm	<=298 mm	<=365 mm	<=432 mm	<=488 mm
Uncoated	• 64-176 g/m^2	71	70	51 Duplex 46/46	39	35	31
	• 177-220 g/m^2	51 Duplex 46/46	51 Duplex 46/46	35	30	25	22
	• 221-256 g/m^2 ‡	51	51	35	30	25	22
	• 257-300 g/m^2 ‡	35	35	25	21	17	15
Coated	• 106-176 g/m^2	51 Duplex 46/46	51 Duplex 46/46	35	30	25	22
	• 177-220 g/m^2	35 Duplex: 31/31	35 Duplex: 31/31	25	21	17	15
	• 221-300 g/m^2 ‡	35	35	25	21	17	15
Transparency	• B/W w/ Finisher	40*	40	29	24	20	17
	• B/W w/o Finisher	40*	40	29	24	20	17
	• Full Color w/Finisher	18*	18	13	11	9	7
	• Full Color w/o Finisher	9*	9	8	7	6	5

*B5 not applicable
‡ does not apply to internal trays (Trays 1-3)

MSI		Paper Size					
		A4 LEF, B5 LEF	8.5" x 11" LEF	A4 SEF 8.5" x 11" SEF	B4 SEF 8.5" x 14" SEF	A3 SEF 11" x 17" SEF	12.6" x 19.2"
		<=210 mm	<=216 mm	<=298 mm	<=365 mm	<=432 mm	<=488 mm
Uncoated	• 64-176 g/m^2	50 Duplex: 45/45	50 Duplex: 45/45	41	35	31	28
	• 177-220 g/m^2	40 Duplex: 36/36	40 Duplex: 36/36	32	27	24	22
	• 221-256 g/m^2	40	40	32	27	24	22
	• 257-300 g/m^2	25	25	19	17	15	14
Coated	• 106-176 g/m^2	40 Duplex: 36/36	40 Duplex: 36/36	32	27	24	22
	• 177-220 g/m^2	25	25	19	17	15	14
	• 221-300 g/m^2	25	25	19	17	15	14
Transparency	• B/W w/ Finisher	40	40	29	24	20	17
	• B/W w/o Finisher	40	40	29	24	20	17
	• Full Color w/Finisher	23	23	15	11	9	7
	• Full Color w/o Finisher	9	9	9	7	6	5

Image Quality

With its low melt EA toner properties and higher print speed, Xerox 700 Digital Color Press will produce output with a lower gloss level that is consistent with offset.

- As with any printing process, artifacts will occur. These include streaks, mottle, banding, spots, etc. For most jobs and clients, the expected level of artifacts is within the normal operational and component quality ranges of the system and will not affect the acceptability of the job. Maintenance procedures are available to mitigate these artifacts.
- Random artifacts will occur.
- Artifact-sensitive jobs should be monitored.
- Using products on the Recommended Media List (RML) and maintaining your environment will also help to minimize the occurrence of these artifacts.
- Color quality perception is subjective and will be affected by ambient lighting conditions.
- The appearance of the document displayed on the monitor screen may not match the output print because the monitor uses RGB color space parameters.
- The customer is responsible for calibrating the Xerox 700 Digital Color Press.

The Xerox 700 Digital Color Press is optimized for most media; specific media may result in curl which can be corrected using the internal de-curlers on the print engine and the optional Interface Module (IFM).

Non-Standard paper sizes

The DocuColor printer system supports non-standard paper sizes. However, due to rounding and unit-conversions that occur in the client applications, print server, and printer, some mismatch may occur between the paper size entered at the application, and the paper size that must be entered at the printer. The operator may need to adjust the entered paper dimensions by up to 0.1 in (2.5 mm) in order for the printer to detect that the requested paper size has been loaded. In addition, the printer interprets some paper sizes included in the PPD as non-standard sizes.

Duplex Prints

- The Duplexing Automatic Document Feeder (DADF) for hardcopy scanning will handle originals from 5.5 x 8.5” to 11 x 17” (or A3) in size, and from 16 to 28lb Bond in weight. The DADF has a maximum capacity of 250 sheets (based on 24lb Paper).
- Automatic duplexing can be done on all sizes of media, up to 220 g/m^2.
- Manual duplexing can be performed on media up to 110lb Cover (300 g/m^2) or coated 100lb Cover (280 g/m^2) from Tray 5 (Bypass).
- Manual duplex can be performed on media up to 13x19" (SRA3 320mmx450mm / Maximum 320mm x 482mm) from Tray 5 (Bypass). (Note: Image quality degradation is possible above 220 g/m^2.)
- As with any printer or copier, duplex performance is not expected to match the performance for single sided copying. Paper jam rates may be higher than the rate you will experience for the same throughput material in single sided mode.

Paper/Throughput

For more detailed information on throughput materials, please refer to the Xerox Materials Usage Guide and the Recommended Materials List.

Tray #	Size	Capacity (using 24lb / 90 g/m^2 Paper)	Specified Weights
1-3	• Min.: 5.5" x 8.5" SEF (139mm x 215.9mm SEF) (5.5" x 8.5" LEF cannot be run) • Max.: 13" x19.2"/SRA3 SEF	• 550 sheets	• 64-220 g/m^2 uncoated 106-220 g/m^2 coated. Higher jam rates (feed rates and multi-feeds) may occur on coated paper in trays 1-3
Tray 5 (Bypass)	• Min: 100mm x 148mm (3.9" x 5.8") SEF • Max: 13 x 19.2" /SRA3 SEF	• 250 sheets	• 64-300 g/m^2 uncoated 106-300 g/m^2 coated
Tray 6 1 tray Oversize HCF (Option)	• B5 up to 13" x 19.2"/SRA3	• 2,000 sheets	• 64-300 g/m^2 uncoated 106-300 g/m^2 coated
Tray 6 & Tray 7 2 tray OHCF (Option)	• B5 up to 13" x 19.2"/SRA3	• 4,000 sheets	• 64-300 g/m^2 uncoated 106-300 g/m^2 coated

- Recommended paper to maximize image quality and product reliability is Xerox Color Xpressions Plus 24lb (smooth bright white paper). This paper is specifically designed to maximize image quality and machine performance over a wide range of environmental conditions.
- Attempts to feed heavier than recommended paper stocks, and/or misuse of the media settings, may cause machine damage or poor image quality. Using media at run modes other than that recommended for the grade may cause poor image quality and serious machine damage.

Transparencies

- The Xerox 700 Digital Color Press will feed 8.5 in x 11 in/A4 transparencies at a speed of 23 ppm color. Use Xerox removable stripe transparency material (USA and Canada: 3R5765; Xerox Europe: 3R93179) for optimum system performance and image projection. These premium transparencies are specifically designed to provide optimum copy quality. Use of other transparencies may cause machine damage and result in excessive service calls.
- Due to the increased thickness of the removable stripe, no more than 100 transparencies should be loaded in a paper tray at one time. The maximum output stack height should not exceed 100 transparencies.

Recommended Supplies

Supply Description	Reorder Number			Cartridges per Carton	Yield Projection at representative total area coverage (using centerline paper)
Dry Ink: *	**WW Metered Toner Reorder Number**	**Western Hemisphere/ Xerox Europe Sold Toner Reorder Number**	**DMO Sold Toner Reorder Number**		**30% (7.5% per color)**
• Black	6R1375	6R1383	6R1379	1	20k per cartridge***
• Cyan	6R1376	6R1384	6R1380	1	22k
• Yellow	6R1378	6R1386	6R1382	1	22k
• Magenta	6R1377	6R1385	6R1381	1	21k
Drum Cartridge:**					
• Black	13R642			1	373k at 100 % Black/White 354k at 100 % Color
• Cyan	13R643			1	156k
• Yellow	13R643			1	156k
• Magenta	13R643			1	156k
Toner Waste Bottle*	8R12990 Contact the Welcome Center for replacement			1	33k
Charge Corotron	13R637			1	175k
Fuser Module	8R13059			1	200k
Convenience and Advance Staple Cartridge	8R12964			1	5,000 staples
Convenience and Advance Staple Refills	8R12941	8R12941	8R12941	3 staple refills (5,000 staples each)	
Light Production Finisher Staples	8R13041	8R13041	8R13041	4 staple refills (5,000 staples each)	
Booklet Maker Staple Refill	8R12925	8R12925	8R12925	4 staple refills (5,000 staples each)	All Booklet makers (Advanced, Professional and Light Production) use this Staple Refill

* The dry ink yield projections are based on the indicated area coverage at standardized conditions on 8.5 in x 11 in/A4 Xerox 700 Digital Color Press centerline paper. Please note that actual yields vary greatly depending on color intensity, area

coverage, paper stock, and mode selected.
** Drum Cartridge replacement frequency noted above for 8.5 in x 11 in/A4 images when using Xerox 700 Digital Color Press centerline paper and other stocks with equivalent smoothness, cut quality and structure. Replacement rates may be more frequent for operations which use high percentages of coated stocks, have area coverage greater than 70% of each color, and/or larger than 8.5 in x 11 in/A4 size throughputs, e.g., 11 in x 17 in/A3.
*** One black cartridge per carton; two black cartridges are used in tandem, with a resulting yield of 40k.

Initial Supplies

- Each Xerox 700 Digital Color Press is delivered with an initial supply of Toner as well as the CRUs (Drum Cartridges, Charge Corotron, Fuser, and Waste Toner Container as well as Staples – included for finishing options with stapling).
- To order additional Supply (toner / staples) or Throughput materials, contact the Xerox Supplies Marketing Center :
  - 1-800-822-2200 US, 1-800-668-0199 CAN (English), 1-800-668-0133 CAN (French.)
  - US Customers on Metered Price Plans should call the Metered Hotline, U.S. 1–800–599-2198 to acquire additional toner.

Environmental and Electrical Requirements

Electrical Requirements

Area	Power Voltage (V)	Frequency (Hz)
XC	208-240V-10%/+6%	50/60+/-3%
XE	220-240V+/-10%	50/60+/-3%

Receptacle Diagram – The Xerox 700 Digital Color Press requires the use of a 15-ampere, 2 pole 3-wire grounding outlet. This is not standard in most modern office buildings and may require professional installation. Consult the diagram (right side) to help in determining the proper outlet. Installation by a qualified electrician is recommended.

A single power cord (see above) is required for the Xerox 700 Digital Color Press. With the exception of the HCF, Advanced Finisher and Professional Finisher, each optional feeding and finishing device requires an additional 100-240VAC minimum 240VA circuit with a Nema 5-15R receptacle (standard in US) or flying-leads.
Ground Fault Protection is provided which meets Xerox internal safety requirements and exceeds the Industry Standards for Information Technology Equipment.

Installation Considerations

- Physical delivery of Xerox 700 Digital Color Press will be by a Xerox authorized "D/R" carrier. The carrier will install and perform a functional check of the printer/copier unit. The carrier will review the software/documentation with the customer. For the printer / copier the customer is responsible for connecting and configuring the equipment on their network.

- With the exception of the High Capacity Feeder, Advanced Finisher and Professional Finisher, (which plug directly into the printer), each optional feeding and finishing device requires an additional 100-240VAC minimum 240VA circuit with a Nema 5-15R receptacle (standard in US) or flying-leads.
- There should be a minimum of 78 inches (1,981 mm) clearance from the floor to the nearest overhead obstruction.
- The unit weighs 583 lbs. (265 kg) - Printer, Scanner, and DADF. The Light Production Finisher with booklet maker, interposer and folder is 392 lbs. (178 kg).
- Electrical requirements and space requirements must be satisfied before the equipment is delivered.
- One network drop is required for installation as a printer / copier.
- Power cord length: 8.5 ft
- Receptacle NEMA Part Number: 6-15R

Environmental Requirements

Environmental	Minimum	Maximum
Temperature	50° F (10° C)	82° F (28° C)
Humidity (non-condensing)	15 % RH	85 % RH
*Better performance is achieved when conditions are maintained between 20-25 °C (68-77 °F) and 45-55% RH.**		
Heat Emission	Approximately 1,500 BTU/Hr (Standby)	50 Hz - 10,568 BTU/Hr (Running) 60 Hz – 11,092 BTU/Hr (Running)
Noise Emission	55 dBA (Standby)	78 dBA (Running)
Power Consumption	≅5.7 watts* (Sleep Mode)	2.2 kVA* (Continuous Running)
Altitude (above sea level)	0 ft (0 meters)	8,200ft. (2,500 meters)
Low Power Mode Power Usage	143 watts	≤300 Watts
Low Power Mode Recovery Time	-	30 seconds
Sleep Mode	-	≤95 Watts
* Stated as an average. Warm up power consumption is 1,600 VA		

Space Requirements

- The Xerox 700 Digital Color Press system is non-movable when installed on any type of carpeting unless the optional mobility plates are used. Details about the purchase of mobility plates are available from your Sales Representative.
- All standard Xerox space requirements apply to this installation including overhead, shared, aisle or hallway, and operator space. See “Calculating Space Required”, in the next section of this document.
- A minimum of 24 inches (609.6 mm) should be maintained between the back of the machine (not the bustled controller) and wall.
- There should be a minimum of 78 inches (1,981 mm) clearance from the floor to the nearest overhead obstruction.

Calculating Space Required for Xerox 700 Digital Color Press

The dimensions listed below provide the overall service space required, including the space to the nearest obstruction. The dimensions reflect both typical and hallway installations and are absolute minimums. The service area (including device dimensions) from front to back is always 102".

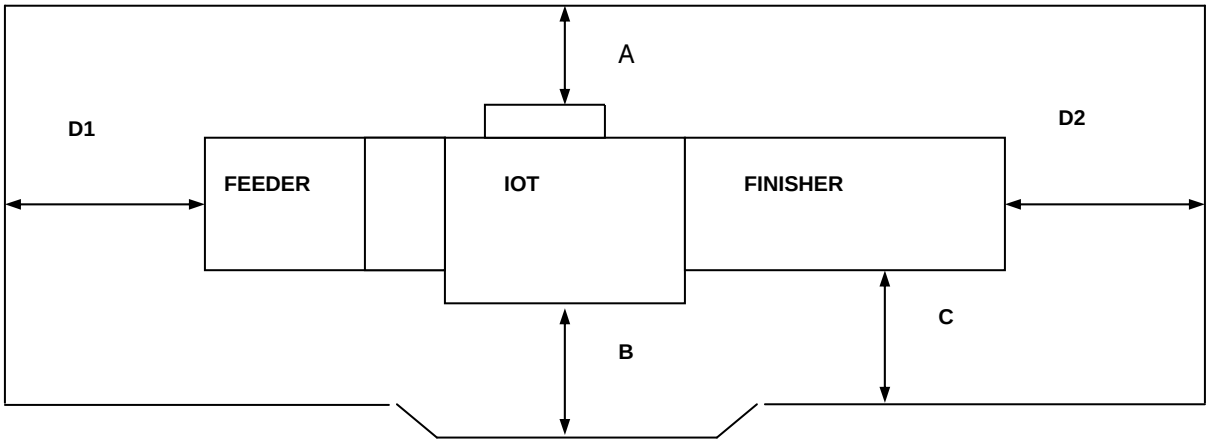

Service/Operational Space		Moveable Installation	Stationary Installation
A	Rear of Processor / System	10" 254 mm	24 " 610 mm
B	Front of main Processor	56" 1422.4 mm	42 " 1067 mm
C	Front of HCF and Finisher / Folder	52" 1320.8 mm	38 " 965 mm
D1	Left Side of System	13" 330 mm	13" 330 mm
D2	Right side of System Finisher	24" 610 mm	24" 610 mm
E	Allowable Height	78 " 1981 mm	78 " 1981 mm
Service Envelope: Width = Dimensions + D1 + D2; Depth = Depth + A + B			

Installation Notes: A minimum of 24 inches (609.6 mm) should be maintained between the back of the machine (not the bustled controller) and wall.

Mobility Plate

Carpeted flooring surfaces may require the installation of a mobility plate to allow the product to be moved during normal maintenance activities

Physical Dimensions

The following table shows the overall physical dimensions of each module of the Xerox 700 Digital Color Press, including space between the modules when connected into a system.

Module	Width inches (mm)	Depth inches (mm)	Height inches (mm)	Weight lbs (kg)
IOT/FFM	30 (762)	30 (762)	56 (1,423)	617.3 (280)
HCF	15 (381)	24 (610)	15 (381)	64 (29)
OHCF	39(991)	30 (762)	39(991)	1-tray :264.55 (120) 2-tray : 418.88 (190)
IFM	13.38 (340)	30 (762)	39(991)	Approx 25 (Approx 11.34)
HCS	31.5 (800)	30 (762)	40 (1,016)	Approx 60 (Approx 27.2)
LPC Finisher	41.14 (1045)	30 (762)	44 (1,118)	231.5 (105)
w/ CZ Folder	49.02 (1245)	30 (762)	44 (1,118)	319.7 (145)

Dimensions for Common Configurations of the Xerox 700 Digital Color Press:

Configuration	Width*	Depth	Height	Weight
Digital Press	30 in.	30 in.	56 in.	661 lbs
	762 mm	762 mm	1423 mm	300 kg
Digital Press + Offset Catch Tray (OCT)	46 in.	30 in.	56 in.	674 lbs
	1168 mm	762 mm	1423 mm	306 kg
Bypass Tray + Digital Press	52 in.	30 in.	56 in.	661 lbs
	1320.8 mm	762 mm	1423 mm	300 kg
Bypass Tray + Digital Press + OCT	68 in.	30 in.	56 in.	674 lbs
	1727 mm	762 mm	1423 mm	306 kg
Bypass Tray + High Capacity Feeder (HCF) + Digital Press + OCT	68 in.	30 in.	56 in.	738 lbs
	1727 mm	762 mm	1423 mm	333 kg
Bypass Tray + Digital Press + Advanced/ Professional Finisher	91 in.	30 in.	56 in.	782/(851) lbs
	2311.4 mm	762 mm	1423 mm	355/(386) kg
Bypass Tray + HCF + Digital Press + Advanced/Professional Finisher	91 in.	30 in.	56 in.	846/(915) lbs
	2311.4 mm	762 mm	1423 mm	384/(415) kg
1-drawer Oversized High Capacity Feeder (OHCF) + Digital Press + Advanced/ Professional Finisher	110 in.	30 in.	56 in.	1047/(1115.5) lbs
	2794 mm	762 mm	1423 mm	475/(506) kg
2-drawer Oversized High Capacity Feeder (OHCF) + Digital Press + Advanced/ Professional Finisher	110 in.	30 in.	56 in.	1201/(1270) lbs
	2794 mm	762 mm	1423 mm	545/(576) kg
Bypass Tray + HCF+ Digital Press + Interface Module + Light Production C Finisher (with Booklet Maker) + C/Z Folder	117 in.	30 in.	56 in.	1221 lbs
	2972 mm	762 mm	1423 mm	554 kg

Configuration	Width*	Depth	Height	Weight
1-drawer OHCF + Digital Press + Interface Module + Light Production C Finisher (with Booklet Maker) + C/Z Folder	136 in.	30 in.	56 in.	1421 lbs
	3454 mm	762 mm	1423 mm	664 kg
2-drawer OHCF + Digital Press + Interface Module + Light Production C Finisher (with Booklet Maker) + C/Z Folder	136 in.	30 in.	56 in.	1576 lbs
	3454 mm	762 mm	1423 mm	715 kg
1-drawer OHCF + Digital Press + Interface Module + High Capacity Stacker (HCS)	116 in.	30 in.	56 in.	1287 lbs
	2946.4 mm	762 mm	1423 mm	584 kg
2-drawer OHCF + Digital Press + Interface Module + High Capacity Stacker (HCS)	116 in.	30 in.	56 in.	1441 lbs
	2946.4 mm	762 mm	1423 mm	654 kg

Standard Configuration Features

The Xerox 700 Digital Color Press is delivered with:

- Print Engine with Scanner
- Duplexing Automatic Document Feeder (DADF)
- Controller connectivity enabled
- Electronic Pre-Collation (EPC)
- 1,900 sheet paper capacity via 3 paper trays and MSI.

Optional Accessories

Accessory	Description
High Capacity Feeder	2,000 sheet capacity (80 g/m^{2}centerline paper)
1 Tray Oversize High Capacity Feeder	2,000 Sheet* (up to 13x19.2/SRA3) capacity from 64-300 g/m^2 (uncoated) and 106-300 g/m^2 (coated).
2 Tray Oversize High Capacity Feeder	4,000 Sheet* (up to 13x19.2/SRA3) capacity from 64-300 g/m^2 (uncoated) and 106-300 g/m^2 (coated).
Advanced Finisher	500 sheet top tray, 3,000 sheet stacker tray
Professional Finisher	500 sheet top tray, 1,500 sheet stacker tray, Up to 20 set booklet tray
Interface Module	The Interface Module aligns the paper paths of the engine and finisher, cools and decurls paper exiting the printer, and allows communication between the engine and finisher. One Interface Module must be ordered when an optional **Light Production C Finisher or High Capacity Stacker** is ordered.

Light Production C Finisher	The Light Production C Finisher includes the punch and stapler, the stacker tray and top exit tray,. It also includes a built-in decurler unit that corrects the curl on paper output from IOT and a built-in interposer that feeds cover paper to finisher for saddle-staple operation.
Light Production C Finisher with Booklet maker	The Light Production C Finisher with booklet unit includes the punch and stapler, the stacker tray and top exit tray, and a booklet unit capable of saddle stapling and bi fold. It also includes a built-in decurler unit that corrects the curl on paper output from IOT and a built-in interposer that feeds cover paper to finisher for saddle-staple operation.
C/Z Folder	An optional Folder unit that can handle Z-fold, Tri-C, and Tri-Z, it can be added to the Light Production C Finisher or the Light Production C Finisher with Booklet maker The C/Z folding tray can accommodate up to 40 sheets of 24 lb (90 g/m^2) media). Supported Paper sizes are 8.5x11" (A4) Allows C/Z folding of media up to 24 lb (90 g/m^2) uncoated.
High Capacity Stacker	Stack up to 5,000 sheets* offsetting output stack tray with movable cart to move to off line finishing. Additional cart is available for customer to order. 500 sheet* top tray, 64 g/m^2- 300 g/m^2, up to 13 x 19.2 (330x488mm) Sample Set – 1.) Programmable at Color Server or 2.) On-Demand at HCS User Interface‡
Foreign Interface Kit	The Foreign Interface Kit enables the connection of external devices such as auditrons or coin-op devices. This will perform in copy and print modes.
Convenience Stapler	Staple up to 50 sheets of 90 g/m^2 / 24 lb. Media.

*based on 80 g/m2 centerline paper
‡ at launch this feature is available only with the FreeFlow server. Creo and EFI servers will offer this capability post-launch.

Combination of Output Functions and Destinations

Finisher	Top Tray	Stack Tray	Staple	Hole Punch	Booklet	Bi-fold	Interposer	C-Z Fold
Advanced Finisher	o	o	o	o				
Professional Finisher	o	o	o	o	o	o		
Light Production C Finisher (LPC Finisher)	o	o	o	o			o	
LPC Finisher w/C-Z fold	o	o	o	o			o	o
LPC Finisher w/ Booklet Maker	o	o	o	o	o	o	o	
LPC Finisher w/ Booklet Maker and C-Z fold	o	o	o	o	o	o	o	o
High Capacity Stacker	o	o						

Optional High Capacity Feeder (HCF)

- 2,000 sheet capacity (80 g/m^{2}centerline paper)
- 220 mm(0.87 in) stack height
- Powered by print engine – no external power source required
- Maximum paper size 8.5 x 11 in./A4
- Weight range: 52-216 g/m^2 (uncoated)

Optional Oversized High Capacity Feeder (OHCF)

- 1 or 2 tray OHCF (each tray requires a fan kit)
- Handles coated substrates up to 220 g/m^2 for auto duplex
- Air-assisted, robust feeder design for oversized and heavyweight
- 2,000 sheet capacity (80 g/m^2 centerline paper)
- Maximum paper size 13 x 19.2 in./SRA3
- Weight range: from 64-300 g/m^2 (uncoated) and 106-300 g/m^2 (coated)
- Maximum auto duplex up to 220 g/m^2 /80 lb. cover, coated and uncoated
- The OHCF requires a 100-240VAC minimum 240VA circuit. with a Nema 5-15R receptacle (standard in US) or flying-leads

Product Specifications (OHCF)

Oversized High Capacity Feeder Module

Capacity:	1 tray, 2,000 sheets
Minimum Paper Weight:	64 g/m^2 uncoated or 106 g/m^2 coated
Maximum Paper Weight:	300 g/m^2 coated or uncoated
Minimum Paper Size:	182mm x 210mm (7.2” x 8.3”)
Maximum Paper Size:	330mm x 488mm (13” x 19.2”)
Maximum Auto Duplex:	220 g/m^2 80-lb cover (coated and uncoated)

Oversized High Capacity Feeder 2-Tray Module (shown with UI)

Capacity:	2 trays, 4,000* sheets (each tray capacity 2,000 sheets)
Minimum Paper Weight:	64 g/m^2 uncoated or 106 g/m^2 coated
Maximum Paper Weight:	300 g/m^2 coated or uncoated
Minimum Paper Size:	182mm x 210mm (7.2” x 8.3”)
Maximum Paper Size:	330mm x 488mm (13” x 19.2”)
Maximum Auto Duplex:	220 g/m2 80 lb cover (coated and uncoated)

* (80 g/m^2 centerline paper)

Advanced Finisher

- 500 sheet top tray, 3,000 sheet stacker tray
- paper side registration ±6mm
- staple paper stack height 5.7 mm (0.22 in)
- 50-sheet, multi-position stapling
- The Advanced Finisher offers Hole Punch as a standard feature.
- Hole punch capacity is equal to the regular capacity of the chosen output tray. For the US, 2- and 3-hole punching is available; for Europe, 2- and 4- hole punch is available. Stacks can be punched on the left or right side, or on the top edge. If hole punching fails, check to make sure that the punch waste container is empty before calling for service.
- Powered by print engine – no external power source required
- 52-216 g/m^2 uncoated stock to all trays
- 217-280 g/m^2 uncoated stock to top tray only

Professional Finisher

- 500 sheet top tray, 1,500 sheet stacker tray
- paper side registration ±6mm
- staple paper stack height 5.7 mm (0.22 in)
- 50-sheet, multi-position stapling
- The Professional Finisher offers Hole Punch as a standard feature.
- Hole punch capacity is equal to the regular capacity of the chosen output tray. For the US, 2- and 3-hole punching is available; for Europe, 2- and 4-hole punch is available. Stacks can be punched on the left or right side, or on the top edge. If hole punching fails, check to make sure that the punch waste container is empty before calling for service.
- Powered by print engine – no external power source required
- 52-216 g/m^2 uncoated stock to all trays
- 217-280 g/m^2 uncoated stock to top tray only
- Up to 20 set booklet tray:
  Stapled: 15 sheets/set
  Non-stapled: 5 sheets/set
  Bi-Fold: 1 sheet/set, up to 169 g/m^2 uncoated stock
  Stackable number of sets depends on paper size

Optional High Capacity Stacker (HCS)

The HCS is designed for long production runs.

- Up to 5,000 sheets offsetting output stack tray with movable cart to move to off line finishing. Additional cart is available for customer to order.
- Sample Set – 1.) Programmable at Color Server or 2.) On-Demand at HCS User Interface. At launch this feature is available only with the Xerox FreeFlow Print Server for the Xerox 700. Xerox CX Print Server, Xerox EX Print Server, Integrated Fiery Color Server and EFI Splash RPX-iii will offer this capability post-launch.
- The HCS requires a 100-240VAC minimum 240VA circuit with a Nema 5-15R receptacle (standard in US) or flying-leads.

- **HCS Top Tray**

HCS top tray	
stack height	500 sheets
paper weight	<=80 g/m^2
min:	100 x 148 mm
max:	13 x 19.2 (in)
stack weight:	70 Kg (154 lb)

- **HCS Stack Tray**

Tray Capacity by weight and paper finish								
Paper type and weight		Paper Size						
		Smallest size	A4	B4	A3		SRA3	
		203 x 182 Min	8.5 x 11	8.5 x 14	11 x 17	12 x 18		13 x 19.2
Uncoated	52-80 g/m^2	5,000	5,000	5,000	5,000	5,000	5,000	5,000
	81-300 g/m^2	H=570mm (22.44 in)	H=570mm (22.44 in)	H=570mm (22.44 in)	H=570mm (22.44 in)	H=570mm (22.44 in)	H=570mm (22.44 in)	H=570mm (22.44 in)
Coated	105-176 g/m^2	H=570mm (22.44 in)	H=570mm (22.44 in)	H=570mm (22.44 in)	H=570mm (22.44 in)	H=570mm (22.44 in)	H=570mm (22.44 in)	H=570mm (22.44 in)
	177-220 g/m^2	H=570mm (22.44 in)	H=570mm (22.44 in)	H=570mm (22.44 in)	H=570mm (22.44 in)	H=570mm (22.44 in)	H=570mm (22.44 in)	H=570mm (22.44 in)

Optional Interface Module (IFM)

- The Interface Module aligns the paper paths of the engine and finisher, cools and decurls paper exiting the printer, and allows communication between the engine and finisher. One Interface Module must be ordered when an optional Light Production C Finisher or High Capacity Stacker is ordered.
- The Interface Module requires a 100-240VAC minimum 240VA circuit with a Nema 5-15R receptacle (standard in US) or flying-leads.
- The Interface Module requires a 100-240VAC minimum 240VA circuit

Optional Light Production C Finisher (shown with Optional Booklet Maker)

This section provides the details and expectations for the optional Light Production C Finisher that will be installed with your Xerox 700 Digital Color Press.

The Light Production C Finisher is an output device that can process the following: 100-sheet stapling, 3,000 sheets stacking, punch, saddle stapling/center-fold, optional Z-fold/three-fold, and cover paper insertion.

The Light Production C Finisher has a built-in decurler unit that corrects the curl on paper output from IOT, a built-in stapler with staple-pin cut function, and a built-in interposer that feeds cover paper to finisher for saddle-staple operation.

The Light Production C Finisher with optional booklet unit (shown in photo) includes the punch and stapler, the stacker tray and top exit tray, and a booklet unit capable of saddle stapling and bi - fold.

Environmental and Electrical Requirements (Light Production C Finisher)

- The Light Production C Finisher requires a 100-240VAC minimum 240VA circuit with a Nema 5-15R receptacle (standard in US) or flying-leads.

Light Production C Finisher Product Specifications

Light Production C Finisher Top Tray Capacity

Tray Capacity by weight and paper finish							
Paper type and weight	Paper Size						
	100 x 148 (mm)	A4 8.5 x 11 (in)	B4 8.5 x 14 (in)	A3 11 x 17 (in)	12 x 18 (in)	SRA3	330 x 488 (mm) 13 x 19.2 (in)
52-80 g/m^2	H=67mm (2.64 in)	500	500	500	500	500	500
80-300 g/m^2	H=67mm (2.64 in)	H=67mm (2.64 in)	H=67mm (2.64 in)	H=67mm (2.64 in)	H=67mm (2.64 in)	H=67mm (2.64 in)	H=67mm (2.64 in)
105-80 g/m^2	H=67mm (2.64 in)	H=67mm (2.64 in)	H=67mm (2.64 in)	H=67mm (2.64 in)	H=67mm (2.64 in)	H=67mm (2.64 in)	H=67mm (2.64 in)
177-280 g/m^2	H=67mm (2.64 in)	H=67mm (2.64 in)	H=67mm (2.64 in)	H=67mm (2.64 in)	H=67mm (2.64 in)	H=67mm (2.64 in)	H=67mm (2.64 in)

Light Production C Finisher Stack Tray Capacity

Number of Sheets by weight and paper finish								
Paper type and weight		Paper Size						
		Smallest size 182X257mm	A4 8.5 x 11 (in)	B4 8.5 x 14 (in)	A3 11 x 17 (in)	12 x 18 (in)*	SRA3*	13 x 19.2 (in)*
Uncoated	52-80 g/m^2	1,500	3,000	1,500	1,500	1,500	1,500	1,500
	80-300 g/m^2	H=180mm (7.09 in)	H=378mm (14.88 in)	H=180mm (7.09 in)	H=180mm (7.09 in)	H=180mm (7.09 in)	H=180mm (7.09 in)	H=180mm (7.09 in)
Coated	105-176 g/m^2	H=180mm (7.09 in)	H=378mm (14.88 in)	H=180mm (7.09 in)	H=180mm (7.09 in)	H=180mm (7.09 in)	H=180mm (7.09 in)	H=180mm (7.09 in)
	177-280 g/m^2	H=180mm (7.09 in)	H=378mm (14.88 in)	H=180mm (7.09 in)	H=180mm (7.09 in)	H=180mm (7.09 in)	H=180mm (7.09 in)	H=180mm (7.09 in)

*Cannot be offset

Light Production C Finisher Bi-Fold Capability (available on Optional Booklet Maker)*

Paper type and weight		Booklet Tray Capability by weight, size and paper finish				
		A4 8.5 x 11 (in)	B4 8.5 x 14 (in)	A3 11 x 17 (in)	12 x 18 (in)	SRA3
Uncoated	60-80 g/m^2	1	1	1	1	1
	81-90 g/m^2	1	1	1	1	1
	91-105 g/m^2	1	1	1	1	1
	106-128 g/m^2	1	1	1	1	1
	129-150 g/m^2	1	1	1	1	1
	151-176 g/m^2	1	1	1	1	1
	177-220 g/m^2	1	1	1	1	1
	221-256 g/m^2	1	1	1	1	1
	256-300 g/m^2	1	1	1	1	1
Coated	105-128 g/m^2	1	1	1	1	1
	129-150 g/m^2	1	1	1	1	1
	151-176 g/m^2	1	1	1	1	1
	105-200 g/m^2	1	1	1	1	1
	200-280 g/m^2	1	1	1	1	1

*Unavailable in Copy Mode

Fold accuracy (lead and side edge): ≤2.5 mm
Bi-Fold: 1 sheet/set, 60-300g/m^2 uncoated stock, 105-280 g/m^2 coated stock

Optional C/Z Folder for the Light Production C Finisher

An optional Folder unit that can handle Z-fold, Tri-C, and Tri-Z, it can be added to the Light Production C Finisher.

- The C/Z folding tray can accommodate 30 sheets of up to 24 lb (90 g/m^2) uncoated media.
- Supported Paper size is 8.5x11" (A4) to the bottom tray, 11 x 17" (A3) to the top tray
- Fold accuracy as shown below:

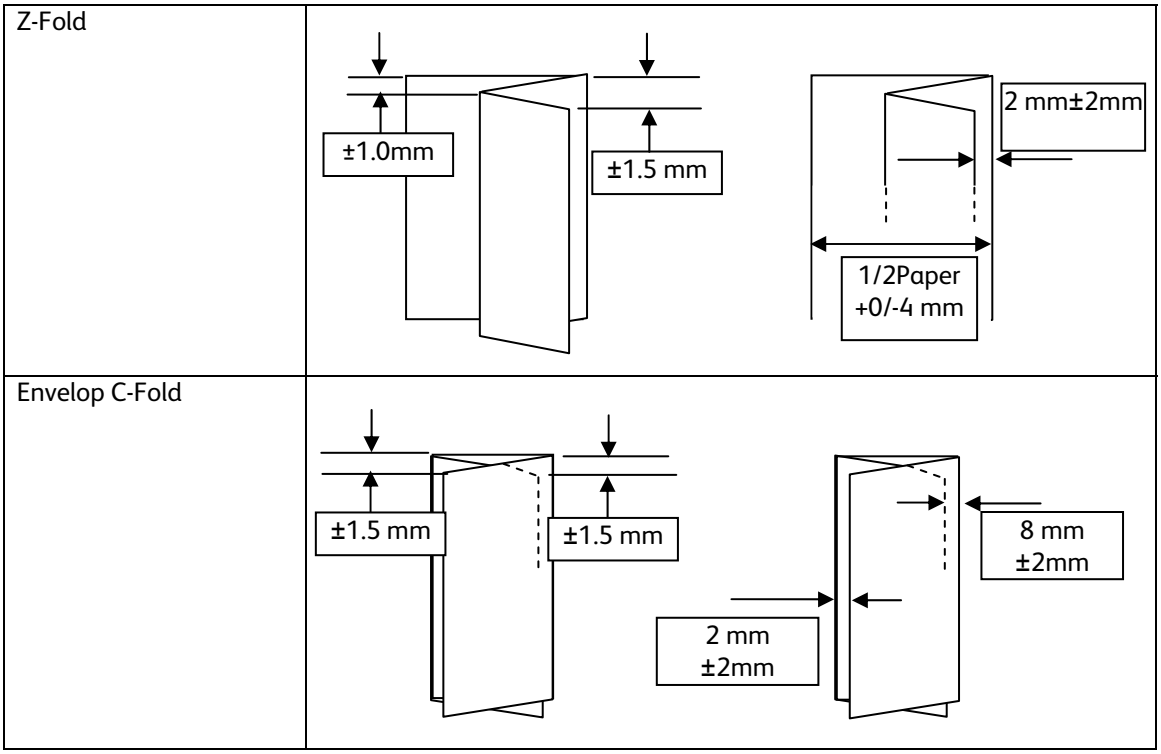

Interposer for the Light Production C Finisher

- The Light Production C Finisher includes a standard Interposer, used to insert pre-printed stock into finished sets without having to go through the engine. Labels, coated media & envelopes are not supported

Tray Capacity by weight, size and paper finish					
Paper type and weight		Paper Size			
		B5	A4 8.5 x 11 (in)	B4 8.5 x 14 (in)	A3 11 x 17 (in)
Uncoated	60-220 g/m^2	200 shts	200 shts	200 shts	200 shts
	81-220 g/m^2	H=22mm (0.87 in)	H=22mm (0.87 in)	H=22mm (0.87 in)	H=22mm (0.87 in)

Hole Punching Capability for the Light Production C Finisher

The Light Production C Finisher offers Hole Punch as a standard feature.

- Hole punching is not available to the Booklet Tray.
- Hole punch capacity is equal to the regular capacity of the chosen output tray.
- For the US, 2- and 3-hole punching is available; for Europe, 2- and 4- hole punch is available. Stacks can be punched on the left or right side, or on the top edge.

Tray Capacity by weight and paper finish					
Paper type and weight		Paper Size			
		B5	A4 8.5 x 11 (in)	B4 8.5 x 14 (in)	A3 11 x 17 (in)
Uncoated	52-200 g/m^2	Applicable	Applicable	Applicable	Applicable
Coated	105-200 g/m^2	Applicable	Applicable	Applicable	Applicable

Staple Capabilities by weight and paper finish for the Light Production C Finisher

Staple Capabilities by weight and paper finish					
Paper type and weight		Paper Size			
		Smallest size 203.2x254 (mm)	A4 8.5 x 11 (in)	B4 8.5 x 14 (in)	A3 11 x 17 (in)
Uncoated	52-80 g/m^2	100	100	100	100
	81-90 g/m^2	up to 100	up to 100	up to 100	up to 100
	91-105 g/m^2	50	50	50	50
	106-128 g/m^2	30	30	30	30
	129-150 g/m^2	19	19	19	19
	151-176 g/m^2	12	12	12	12
	177-220 g/m^2	5	5	5	5
	221-256 g/m^2	4	4	4	4
	256-300 g/m^2	3	3	3	3
Coated	106-128 g/m^2	5	5	5	5
	129-150 g/m^2	5	5	5	5
	151-176 g/m^2	5	5	5	5
	177-220 g/m^2	5	5	5	5
	221-256 g/m^2	4	4	4	4
	256-300 g/m^2	3	3	3	3

Optional Booklet Maker for the Light Production C Finisher*

Tray Capacity by weight, size and paper finish						
Paper type and weight		Paper Size				
		A4 8.5 x 11 (in)	B4 8.5 x 14 (in)	A3 11 x 17 (in)	12 x 18 (in)	SRA3
Uncoated	60-80 g/m^2	25	25	25	25	25
	81-90 g/m^2	20	20	20	20	20
	91-105 g/m^2	10	10	10	10	10
	106-128 g/m^2	10	10	10	10	10
	129-150 g/m^2	10	10	10	10	10
	151-176 g/m^2	10	10	10	10	10
	177-220 g/m^2	5	5	5	5	5
	221-256 g/m^2	4	4	4	4	4
	256-300 g/m^2	3	3	3	3	3
Coated	106-128 g/m^2	10	10	10	10	10
	129-150 g/m^2	10	10	10	10	10
	151-176 g/m^2	10	10	10	10	10
	177-220 g/m^2	5	5	5	5	5
	221-256 g/m^2	4	4	4	4	4
	256-300 g/m^2	3	3	3	3	3

*Unavailable in Copy Mode
Fold accuracy of the inner sheet (lead and side edge):
Stapled: ≤1.5 mm for A4 sheets, ≤2.0 mm for other sizes
Non-stapled: ≤1.5 mm
Stapled: 25 sheets/set
Non-stapled: 5 sheets/set

Light Production C Finisher Product Caveats/Limitations

- If the compiler tamper arm resets itself during a job, the job will need to be re-submitted
- If hole punching fails, check to make sure that the punch waste container is empty before calling service
- After cancelling a job sent to the Booklet maker, empty the purge tray (located inside the Light Production C Finisher) before submitting another print job. This will ensure that purged sheets are not inadvertently inserted into the next booklet printed.

Customer Agreement

Reference Material
Xerox 700 Digital Color Press is shipped with a complete set of user guides on a CD ROM.

Customer Support
The **Xerox Customer Support Centers** are available to provide general information, answer questions and take service calls. You can reach the Customer Support Center at the following toll-free phone numbers:

United States 1-800-821-2797
Canada 1-800-939-3769

To order Replacement Customer Replaceable Units (CRUs):
Full Service Maintenance customers order replacement CRU's through Xerox Customer Support Center using the toll free number above. Time and Materials Maintenance customer order replacement CRU's through the Logistics Customer Support Center at 1-800-828-5881.

To order additional Supply (toner / staples) or Throughput materials: The Xerox Supplies Marketing Center, 1-800-822-2200 US, 1-800-668-0199 CAN (English), 1-800-668-0133 CAN (French) is available for ordering Xerox supplies, including paper and other throughput material.

US Customers on Metered Price Plans should call the Metered Hotline, U.S. 1–800–599-2198 to acquire additional toner.

Customer Training
Customer training on machine features and functions is a purchasable service for the Xerox 700 Digital Color Press.

Responsibility Matrix:

Action	Customer	Xerox
Communicate the need for adequate space and power to accommodate the Xerox 700 Digital Color Press and accessories.		X
Provide adequate space and power to configure the Xerox 700 Digital Color Press.	X	
Unpack system / components		X
Install system hardware		X
Connect all System Components prior to powering up the system		X
Install the printer description files and server, status Desktop Accessories on Client (Printer only)	X	
Ensure network configuration (Printer only)	X	
Confirm network integrity (Printer only)	X	
Acquire and install client workstation network software (Printer only)	X	
Run initial software diagnostics when directed	X	
Monitor and adjust as required	X	
Load any additional fonts (Printer only)	X	
Order and replace Customer Replaceable Units (Drum cartridges, Fuser and Waste Toner Cartridge) as needed.	X	
Provide Help Line support (with purchase of FSMA)		X
Provide spared parts (with purchase of FSMA)		X
Provide service (with purchase of FSMA)		X
Return failed or expended parts and cartridges	X	X

Customer Expectations Agreement[1]

Check off the modules that will be part of this install and for which expectations have been set:

_____ Xerox 700 Digital Color Press

_____ Optional High Capacity Feeder

_____ Optional Oversized High Capacity Feeder (1- or 2- Tray)

_____ Optional Interface Module (IFM)

_____ Optional Advanced Finisher

_____ Optional Professional Finisher with Booklet Maker

_____ Optional Light Production C Finisher (LPC Finisher)

_____ Optional Light Production C Finisher (LPC Finisher) with Booklet Maker

_____ Optional CZ Folder (CZ Folder)

_____ Optional High Capacity Stacker (HCS)

_____ Xerox FreeFlow Print Server for the Xerox 700

_____ Xerox CX Print Server, Powered by Creo for the Xerox 700

_____ Xerox EX Print Server, Powered by Fiery for the Xerox 700

_____ Integrated Fiery Color Server

_____ EFI Splash RPX-iii (Requires passing data through the Xerox EX Print Server or Integrated Fiery Color Server)

Primary Customer Applications:

Special considerations or performance limitations identified by Xerox and agreed to by the customer:

I have reviewed and understand the product specifications for each of the modules that will be installed: (Signatures Required)

_____
Customer

_____
Xerox Sales Representative

_____
Xerox Customer Service Representative

I have viewed a representative output sample from the Xerox 700 Digital Color Press and the image quality is acceptable for the needs of my organization:
(Signature required if Xerox 700 Digital Color Press is included with Order)

_____
Customer

[1] A separate CED must be filled out and signed for the print server.